ETA-Danmark A/S
Göteborg Plads 1
DK-2150 Nordhavn
Tel. +45 72 24 59 00
Fax +45 72 24 59 04
Internet
www.etadanmark.dk

Authorised and notified according to Article 29 of the Regulation (EU) No 305/2011 of the European Parliament and of the Council of 9 March 2011

MEMBER OF EOTA

European Technical Assessment ETA-23/0570 of 2023/08/24

I General Part

Technical Assessment Body issuing the ETA and designated according to Article 29 of the Regulation (EU) No 305/2011: ETA-Danmark A/S	
Trade name of the construction product:	Simpson Strong-Tie CCS connector
Product family to which the above construction product belongs:	Three-dimensional nailing plate (timber to timber and timber to concrete/steel hold downs and post bases)
Manufacturer:	SIMPSON STRONG-TIE Int. Ltd For local branch refer to www.strongtie.eu
Manufacturing plant:	SIMPSON STRONG-TIE Manufacturing facilities
This European Technical	26 pages including 4 annexes which form an integral part of the document
This European Technical Assessment is issued in accordance with Regulation (EU)	EAD 130186-00-0603 for Three-dimensional nailing plates
This version replaces:	-

INDEX

II SPECIFIC PART OF THE EUROPEAN TECHNICAL ASSESSMENT 4

1 TECHNICAL DESCRIPTION OF PRODUCT 4
2 SPECIFICATION OF THE INTENDED USE IN ACCORDANCE WITH THE APPLICABLE EUROPEAN ASSESSMENT DOCUMENT (HEREINAFTER EAD) 4
3 PERFORMANCE OF THE PRODUCT AND REFERENCES TO THE METHODS USED FOR ITS ASSESSMENT 6
3.2 Safety in case of fire (BWR2) 6
3.3 General aspects related to the performance of the product 6
3.4 Safety principles and partial factors 7
3.5 Mechanical resistance and stability 7
3.6 Aspects related to the performance of the product 7
3.7 General aspects related to the fitness for use of the product 7
4 ATTESTATION AND VERIFICATION OF CONSTANCY OF PERFORMANCE (AVCP) 9
4.1 AVCP system 9
5 TECHNICAL DETAILS NECESSARY FOR THE IMPLEMENTATION OF THE AVCP SYSTEM, AS FORESEEN IN THE APPLICABLE EAD 9

ANNEX A: REVISION HISTORY 10

PRODUCT NAMES AND ALTERNATIVE NAMES 10

ANNEX B TYPICAL INSTALLATION 11

ANNEX C BASIS OF DESIGN 13

C0 SYMBOLS USED IN THIS ETA 13
C1 DESIGN BASIS – GENERAL 13
C2 DEFINITION OF FORCE DIRECTIONS 17

ANNEX D PRODUCT DEFINITION AND CAPACITIES 19

D1: CCS 19

Translations of this European Technical Assessment in other languages shall fully correspond to the original issued document and should be identified as such.

Communication of this European Technical Assessment, including transmission by electronic means, shall be in full (excepted the confidential Annex(es) referred to above). However, partial reproduction may be made, with the written consent of the issuing Technical Assessment Body. Any partial reproduction has to be identified as such.

II SPECIFIC PART OF THE EUROPEAN TECHNICAL ASSESSMENT

1 Technical description of product

CCS connectors are used in timber to timber and timber to steel connections.

CCS connectors are assembled of a cylindrical part made of steel 1.0570 according to EN 10250 and full-threaded timber screws (CSFT) which are used to connect the CCS to a first timber member.The CSFT screws can be replaced by screws which show a fitting geometry and also covered by EN14592 or an ETA, in this case the connector properties must be adjusted to the corresponding screw properties. An additional bolt (the bolt can also be replaced by a rod if all proofs are adjusted accordingly) is needed to connect the CCS to the second member which can be made of steel or timber..
The CCS features a metric inner thread in the center, as well as eight 45° holes at its circumference. The eight 45° holes are formed to accommodate special timber screws to be driven into a timber member supporting the overall load carrying capacity of the connection. This member, to which the CCS is connected with timber screws, is called member1. Member1 is always a timber member. The CCS shall be countersunk with its nominal diameter into member1 and fixed to it with connector screws. The other member, which can be made of timber or steel and is called member 2, is connected via an additional bolt anchoring into the central inner thread of the CCS. The thread of the bolt must fully embed into the inner thread of the cylindrical connector. Therefore, a borehole into the member1 is needed which allows the bolt to protrude the cylindrical connector far enough to guarantee a tight bolt fit. The connector can be countersunk into member 2, details can be found in annex B.

Dimensions and typical installations are shown in annex A to D.

2 Specification of the intended use in accordance with the applicable European Assessment Document (hereinafter EAD)

The CCS is intended to be used as a load bearing connector when combined with additional screws and an additional bolt. It shall connect a timber member to either a timber or steel member, where requirements for mechanical resistance and stability and safety in use in the sense of the Basic Work Requirements 1 and 4 of the Regulation 305/2011 (EU) shall be fulfilled.

The main applications of a CCS are joist/header, beam/column and beam-aside-beam connections, but also any similar use is possible. The CCS connector can either be loaded in lateral or axial direction, where axial compression loads are usually not transmitted by the CCS but should instead be transferred via direct contact between both members.

The connectors are used for timber joints designed according to Eurocode 5, in addition some verifications have to be done according to Eurocode 3 when connected to a steel member. CCS connectors are used for joints of timber or wood-based products.

The wood members can be of solid timber, glued laminated timber and similar glued members, or wood-based structural members with a characteristic density from 290 kg/m^3 to 420 kg/m^3.

The connectors can be installed as joint between wood based members such as:

- Solid timber classified to C14-C40 according to EN 338 / EN 14081
- Glued members of timber classified to C14-C40 according to EN 338 / EN 14081 when structural adhesives are used.
- Glued laminated timber classified to GL24c or better according to EN 1194 / EN 14080.
- Solid Wood Panels, SWP according to EN 13353.
- Laminated Veneer Lumber LVL according to EN 14374
- Plywood according to EN 636
- Oriented Strand Board, OSB according to EN 300
- Cross Laminated timber according to EN 16351
- Engineered wood products according to European Technical Approval if the ETA of the product includes provisions for the use of self-tapping screws and ring-connectors, the provisions of the ETA of the engineered wood product apply

Annex C states formulas for the characteristic load-carrying capacity of the CCS connectors, which depend on the characteristic density of the timber employed.

For timber or wood based material with a lower characteristic density than 350 kg/m^3 the load-carrying capacities shall be reduced by the k_{dens} factor:

$$k_{dens} = \left(\frac{\rho_k}{350} \right)$$

Where ρ_k is the characteristic density of the timber in kg/m^3.

For timbers with a higher characteristic density than 350 kg/m^3 all load-carrying capacities based on timber may be increased by k_{dens} accordingly up to a density of maximum 420 kg/m^3.

It is assumed that the forces acting on the connection are the following F_{ax} and F_{lat}. The force F_{ax} acts in direction of the bolt axis, where F_{lat} acts perpendicular to the axis of the bolt. It is assumed that the forces are acting right at the end of the joist.
It is assumed that the header beam is prevented from rotating. If the header beam only has installed a connector on one side the eccentricity moment shall be considered where B_H is the header width. The same applies when the header has connections on both sides, but with vertical forces which differ more than 20%.
If a group of m CCS connectors, all connected to the same member, is submitted to an axial load, only the effective number m_{ef} may be taken in account:

$$m_{ef} = m^{0,9}$$

The connectors are intended for use in connections subject to static or quasi static loading.

The design of the connections shall be in accordance with Eurocode 5 or a similar national provision. The wood members shall have a thickness of at least 50mm, but always sufficient thick to ensure that the timber screws are fully embedded into the timber.

The use of CCS connectors is limited to service class 1 and 2 due to the screw inclination.
CCS connectors assembled to post-bases on the bottom side of the timber may therefore only be used in in areas of the timber with no direct water contact.

The bolts and washers shall be made from a suitable material.

The scope of the connectors regarding resistance to corrosion shall be defined according to national provisions that apply at the installation site considering environmental conditions and in conjunction with the admissible service conditions according to EN 1995-1-1 and the admissible corrosivity category as described and defined in EN ISO 12944-2

Assumed working life
The provisions made in this European Technical Assessment are based on an assumed intended working life of the connectors of 50 years.

The indications given on the working life cannot be interpreted as a guarantee given by the producer or Assessment Body, but are to be regarded only as a means for choosing the right products in relation to the expected economically reasonable working life of the works.

3 Performance of the product and references to the methods used for its assessment

Characteristic	Assessment of characteristic
3.1 Mechanical resistance and stability*) (BWR1)	
Joint Strength - Characteristic load-carrying capacity	See Annex D
Joint Stiffness	No performance assessed
Joint ductility	No performance assessed
Resistance to seismic actions	No performance assessed
Resistance to corrosion and deterioration	See section 3.6
3.2 Safety in case of fire (BWR2)	
Reaction to fire	The CCS are made from steel classified as Euroclass A1 in accordance with EN 13501-1 and Commission Delegated Regulation 2016/364
Resistance to fire	No performance assessed
3.3 General aspects related to the performance of the product	The CCS connectors have been assessed as having satisfactory durability and serviceability when used in timber structures using the timber species described in Eurocode 5 and subject to the conditions defined by service class 1 and 2
Identification	See Annex A

*) See additional information in section 3.4 – 3.7.

3.4 Safety principles and partial factors

The characteristic load-carrying capacities are based on the characteristic values of the connections with metal fasteners, the steel connector and the timber members.

In the case of timber failure or failure of the metal fasteners, the design values shall be calculated according to EN 1995-1-1 by dividing the characteristic values of the load-carrying capacities by different partial factors for the strength properties, and in addition multiplied with the coefficient k_{mod}.

In the case of steel failure, the design value shall be calculated according to EN 1993-1-1 by reducing the characteristic values of the load-carrying capacity with different partial factors.

The design value of the load-carrying capacity is the smaller value of all load-carrying capacities:

$$F_{Rd} = \left\{ \frac{k_{mod} \times F_{Rk,T}}{\gamma_{M,T}} ; \frac{F_{Rk,S}}{\gamma_{Mi,S}} \right\}$$

Therefore, for timber failure or failure of the metal fasteners the load duration class and the service class are included. The different partial factors γ_M for steel or timber failure, respectively, are also correctly taken into account.

3.5 Mechanical resistance and stability

See annex D for characteristic load-carrying capacity in the different force directions.

The characteristic capacities of the CCS connectors are determined by calculation assisted by testing as described in EAD 130186-00-0603. They should be used for designs in accordance with Eurocode 5 or a similar national Timber Code.

The design models allow the use of fasteners described in annex C.

No performance has been determined in relation to ductility of a joint under cyclic testing. The contribution to the performance of structures in seismic zones, therefore, has not been assessed.

See annex D for the joint's stiffness properties - to be used for the analysis of the serviceability limit state.

3.6 Aspects related to the performance of the product

3.6.1 Corrosion protection in service class 1 and 2

The use of CCS-connectors made of carbon steel is limited to service class 1 and 2.

3.6.2 Corrosion protection in service class 3

CCS-connectors on post-bases can be used in higher corrosivity categories if corresponding coatings are used. However, as constant high timber moistures or direct water contact for 45° inclined screws is prohibited and for that reason limited to service-class 2, the use of CCS in service-class 3 is generally not possible.

3.7 General aspects related to the fitness for use of the product

CCS connectors are manufactured in accordance with the provisions of this European Technical Approval using the manufacturing processes as identified in the inspection of the plant by the notified inspection body and laid down in the technical documentation.

The following provisions concerning product performance apply:

CCS Connector joints

A connector joint is deemed fit for its intended use provided:

- The header beam shall be restrained against rotation and be free from wane under the connector.
  If the header carries joists only on one side the eccentricity moment from the joists
  $M_{ec} = R_{joist} * (B_H/2)$
  shall be considered at the strength verification of the header.
  R_{joist} Reaction force from the joists
  B_H Width of header

- For a header with joists from both sides but with different reaction forces a similar consideration applies.
- Connectors are fastened to secondary members by bolts or threaded rods.
- The characteristic capacity of the connector joint is calculated according to the manufacturer's technical documentation, dated May 2023.
- The connector joint is designed in accordance with Eurocode 5 or an appropriate national code.
- There is no gap between the end of the joist and header, beam – column respectively.
- The height and depth of the joist or header shall be such that the minimum fastener end and edge distances are observed.

The actual end bearing capacity of the timber

member to be used in conjunction with the connector is checked by the designer of the structure to ensure it is not less than the connector capacity and, if necessary, the connector capacity reduced accordingly.

There are no specific requirements relating to preparation of the timber members, besides those described in annex B, necessary.

4 Attestation and verification of constancy of performance (AVCP)

4.1 AVCP system

According to the decision 97/638/EC of the European Commission1, as amended, the system(s) of assessment and verification of constancy of performance (see Annex V to Regulation (EU) No 305/2011) is 2+.

5 Technical details necessary for the implementation of the AVCP system, as foreseen in the applicable EAD

Technical details necessary for the implementation of the AVCP system are laid down in the control plan deposited at ETA-Danmark prior to CE marking.

Issued in Copenhagen on 2023-08-24 by

Thomas Bruun
Managing Director, ETA-Danmark

Annex A: Revision History

Modifications and additions to the previous versions of ETA-	
Issue No.	Update
1.0	First release

Product names and alternative names

The product name of a single product is CCSxx. If the product is sold in a kit together with suiting screws the product name CCSxx will be expanded with the relevant screw length, e.g. a CCS30 together with screws 5x70: CCS30/70
Alternative names are not in use

The annexed "x" in the name of products is for the different size of products, the range is given in the Figure D1-1.
It may be possible to add at the end of name following letter and/or combinations.

G	= galvanized
S or S2 or IX	= Stainless or Inox
HCR	= High Corrosion Resistant steel
Z	= ZM310 or other coating
-K	= Kit; incl. fasteners
-B	= without Barcode
-R	= Retail

Annex B Typical Installation

Installation details

Realising a load bearing connection with a CCS requires a certain preparation of both members to be connected.

Member1: this is the member in which the timber screws through the CCS are inserted to.
Member2: this is the member which is connected with a bolt to the CCS

The CCS shall be inserted into a blind hole in member1, created with the nominal diameter of the connector. In prolongation of the drilling axis an additional blind hole is required allowing the bolt to protrude through the connector and be tightened.

Lateral force connections: If member2 is also made of timber the blind hole in member1 shall be 15mm deep and in member2 10mm deep. If member2 is made of steel the blind hole in member1 must be 25mm deep and an additional internal washer must be applied.

Pure axial force connections: In this case the CCS may be sunk deeper than 15mm into member1

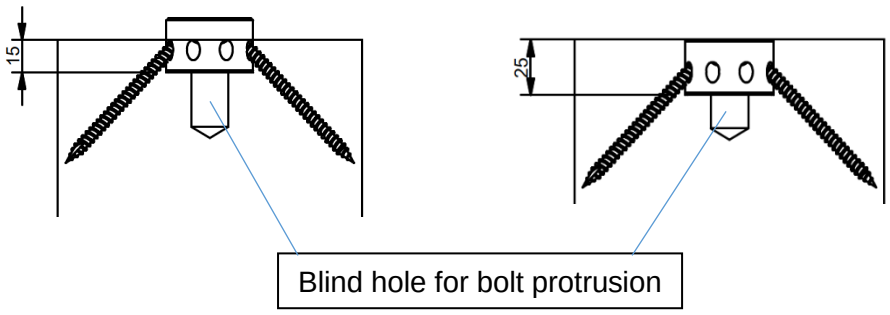

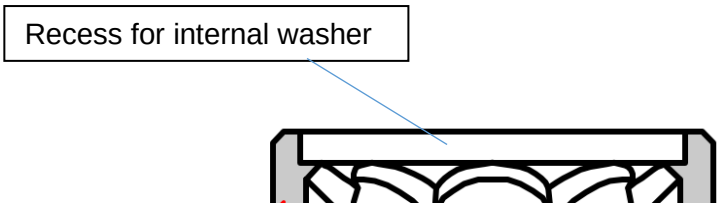

Axial force connections: The blind hole in member1 can be deeper than stated above. The depth T can only limited by the ability to insert the timber screws.

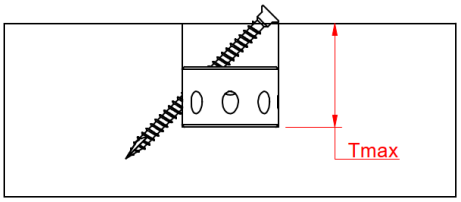

Typical applications

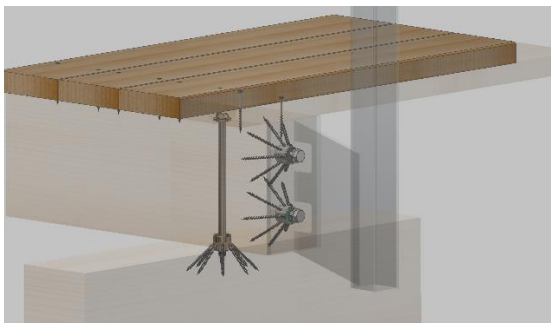

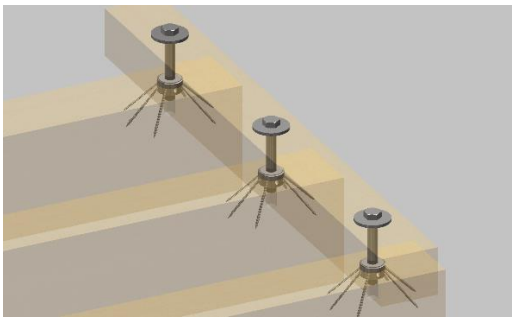

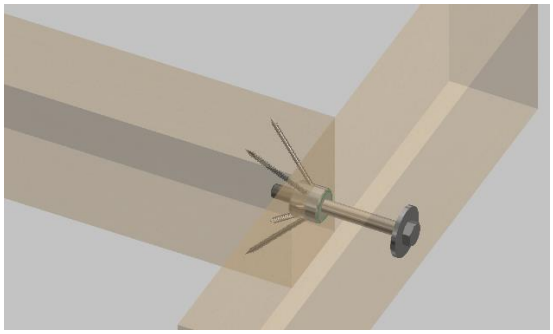

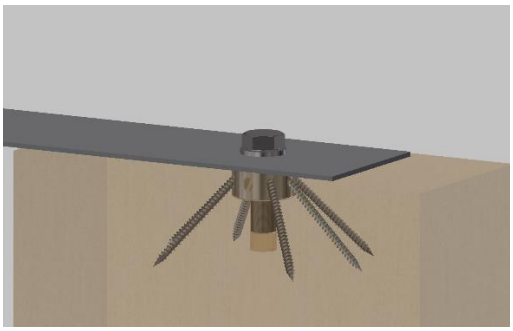

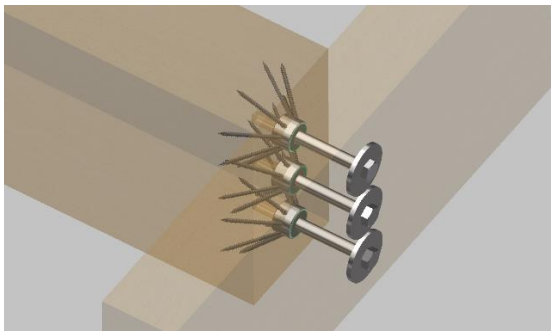

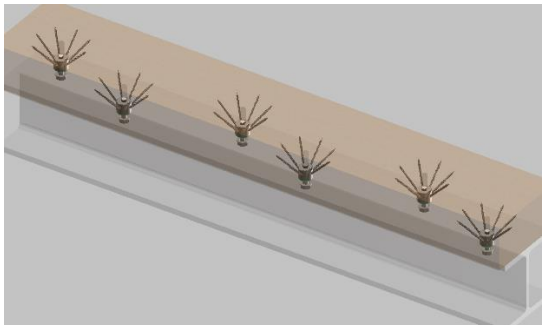

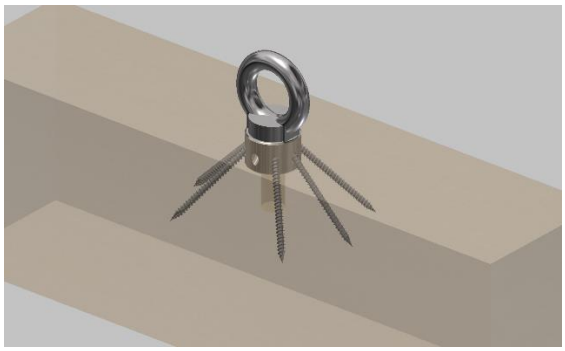

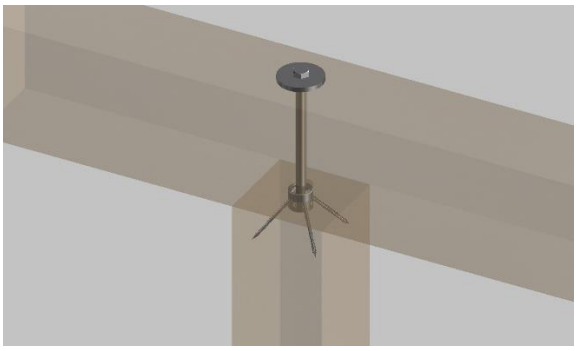

Annex C Basis of design

C0 Symbols used in this ETA

Optional suffixes are shown in curly brackets

$F_{\{lat/ax,d/k\}}$	impact loads, suffixes indicating force direction and type
$R_{\{lat/ax,d/k\}}$	resistance forces, suffixes indicating force direction and type
$R_{\{2/3,lat/ax,d/k\}}$	components of the single screw resistance forces, each contributing to the overall resistance
$R_{screw\{lat/ax,d/k\}}$	timber screw group resistances, suffixes indicating direction and type
$R_{1,lat\{end/side,d/k\}}$	lateral bolt resistances, suffixes indicating location and type
$n_{ef\{1/2/3/,dir1/2\}}$	effective screw numbers, suffixes indicating relevant number and direction

C1 Design Basis – general

<u>Splitting:</u> Under lateral load the splitting of the timber shall always be regarded in a CCS joint, especially for timber widths <120mm. The EC5 proof shall be used to find the splitting resistance of the connection. The centre of the threaded part of the screw closest to the critical timber edge defines the relevant height h_e required for the splitting proof for member1.

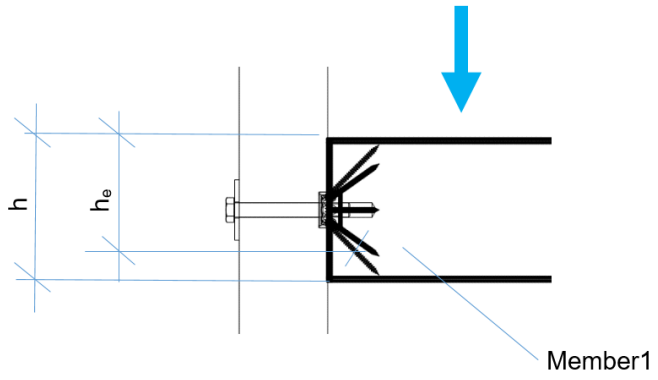

For member2 the centre of the CCS defines the relevant height h_e

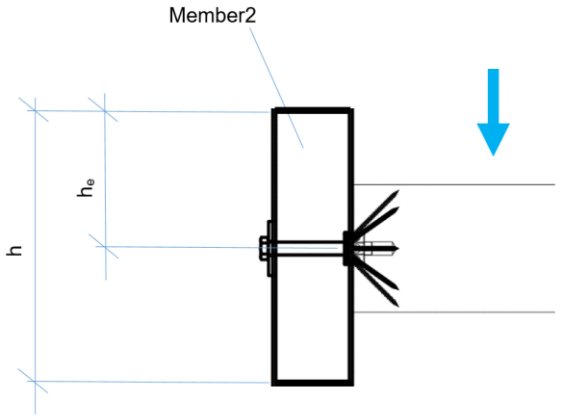

fig.1: relevant height h_e for splitting proof

Edge distances and spacing:

Generally:
the distances below refer to connector performance alone. The timber screws in use shall never protrude outside the timber therefore the screw geometry and the chosen screw pattern can require higher edge distances than stated below. If more than one connector is in use and the distance is close enough that screw collision can appear, they shall be turned slightly against each other to avoid such.

CCS on side grain:

	diameter connector		
	30	40	50
a_1	60	80	100
a_2	39	52	65
$a_{3,t}$	60	80	100
$a_{3,c}$	36	48	60
$a_{4,t}$	36	48	60
$a_{4,c}$	30	40	50

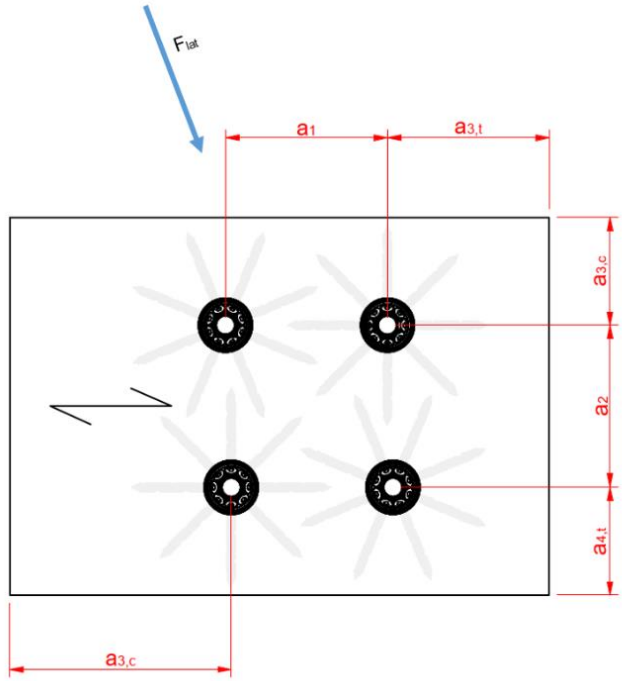

fig.2: spacing and edge distances on side grain

CCS on end grain:

	diameter connector		
	30	40	50
a_1	50	60	80
a_2	50	60	80
$a_{3,t}$	50	60	80
$a_{3,c}$	50	60	80
$a_{4,t}$	50	60	80
$a_{4,c}$	50	60	80

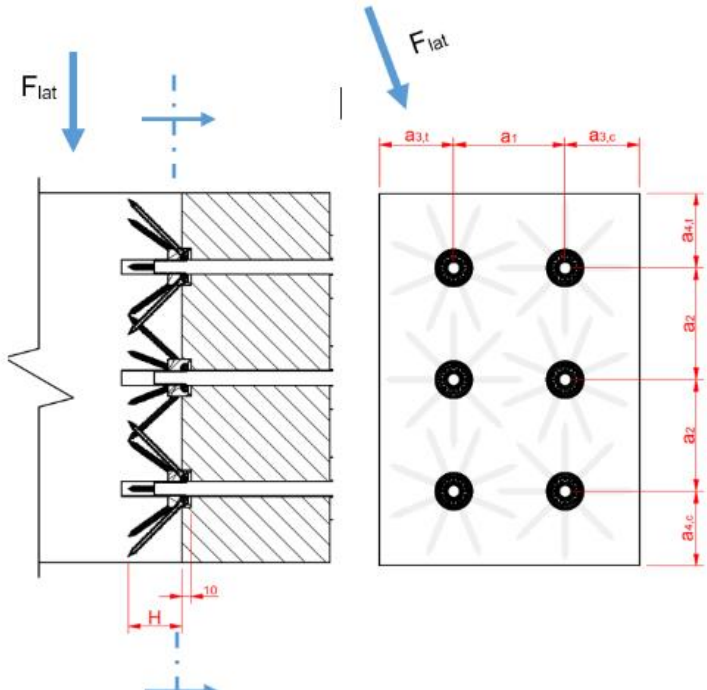

fig.3: spacing and edge distances on end grain

Four different screw patterns have been evaluated:

pattern1: 8 screws, every hole filled

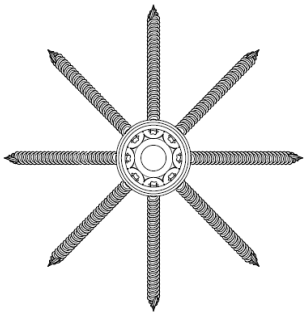

pattern 2: 4 screws, all 90° aligned

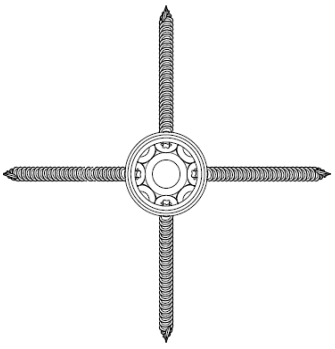

pattern 3: 6 screws, triplets opposing

pattern 4: 4 screws, 2 pairs of 45° opposing

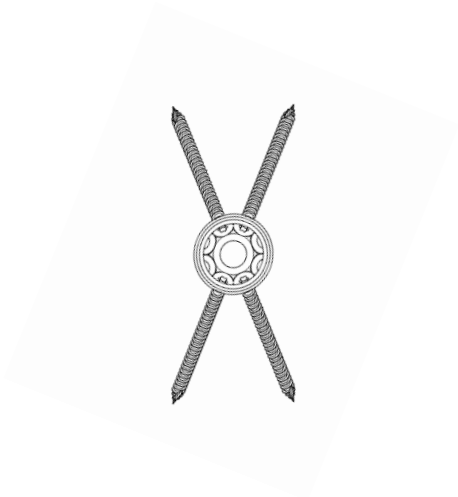

fig.4: evaluated screw patterns 1,2,3 and 4

The different screw patterns show different resistances for each load directions. Each pattern shows two main directions for different resistances which are repetitive beyond. The angel between these directions differ from pattern to pattern. The following figure show the definitions of directions 1 and 2 for each screw pattern:

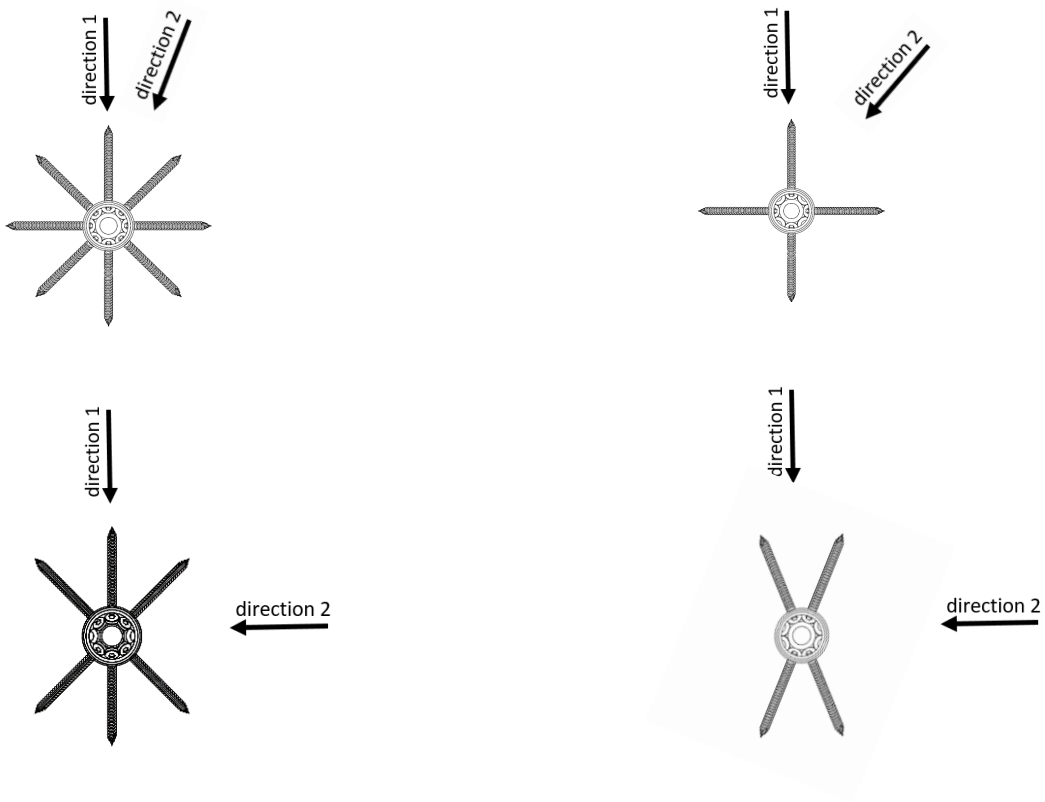

fig.5: definition of load directions for patterns 1,2,3 and 4

C2 Definition of force directions

The capacities in the tables are stated in [N]

Acting forces
Unless otherwise indicated in the tables with load-carrying capacities, the forces are assumed to act as described below:

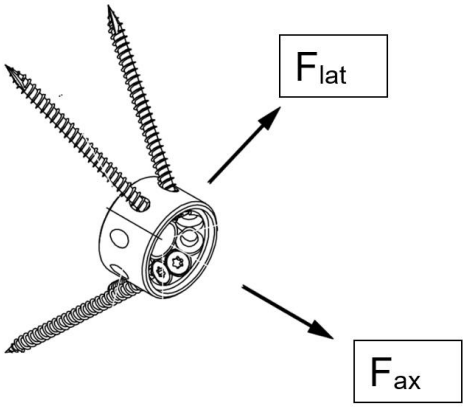

fig.6: definition of force directions

F_{ax} Impact load acting along the central axis of the connector, resp. parallel to the bolt

F_{lat} Impact load acting perpendicular the central axis of the connector, resp. perpendicular to the bolt

R_{ax} Load-carrying capacity acting in direction of the central axis of the connector, parallel to the bolt

R_{lat} Load-carrying capacity acting perpendicular to the central axis of the connector, perpendicular to the bolt

Combined forces
For combinations of loads, the following equation shall be fulfilled, unless otherwise indicated.

$$\frac{F_{lat,d} - R_{1,lat,d} + F_{ax,d}}{R_{ax,d}} \leq 1.0$$

The direction compared to the timber grain direction (α=0° parallel to grain; α=90° perpendicular to grain) of the lateral impact load F_{lat} shall be determined (or as a safe side assumption considered α=90°) if the connector is placed on the side grain of the member. The value α is needed to evaluate the resistance capacity.

C3 Fasteners

A proper installation of the CCS requires additional fasteners, a number of timber screws and a bolt with a washer

Timber screws:

The CCS30 requires CSFT timber screws of 5mm diameter, the CCS40 and CCS50 CSFT timber screws of 6mm diameter.
CSFT screws can be replaced by CE-marked full-threaded screws that show following characteristics:

- The screw head shall tightly fit into the counter-sink without overlap to the adjacent screw
- The collar underneath the head must tightly fit into the hole
- The threaded part must reach into the hole and have a tight fit in there
- The threaded part much reach at least 60mm into the timber

The connector performance must be changed accordingly to the properties of the screws used.

Bolts:

In case member2 is made of timber: The bolts shall be in accordance with EN15048, at least grade of 4.6. Any higher grades may be also used if the material properties are in line with EN14592 requirements . Also a washer with a diameter of at least 3 x bolt diameter shall be applied on the back side of member2. This washer is considered load bearing.

Annex D Product definition and capacities

D1: CCS

Product name	Alternative names
CCS	

Figure D1-1: Drawings CCS30, CCS40 and CCS50 (top and side view screws added)

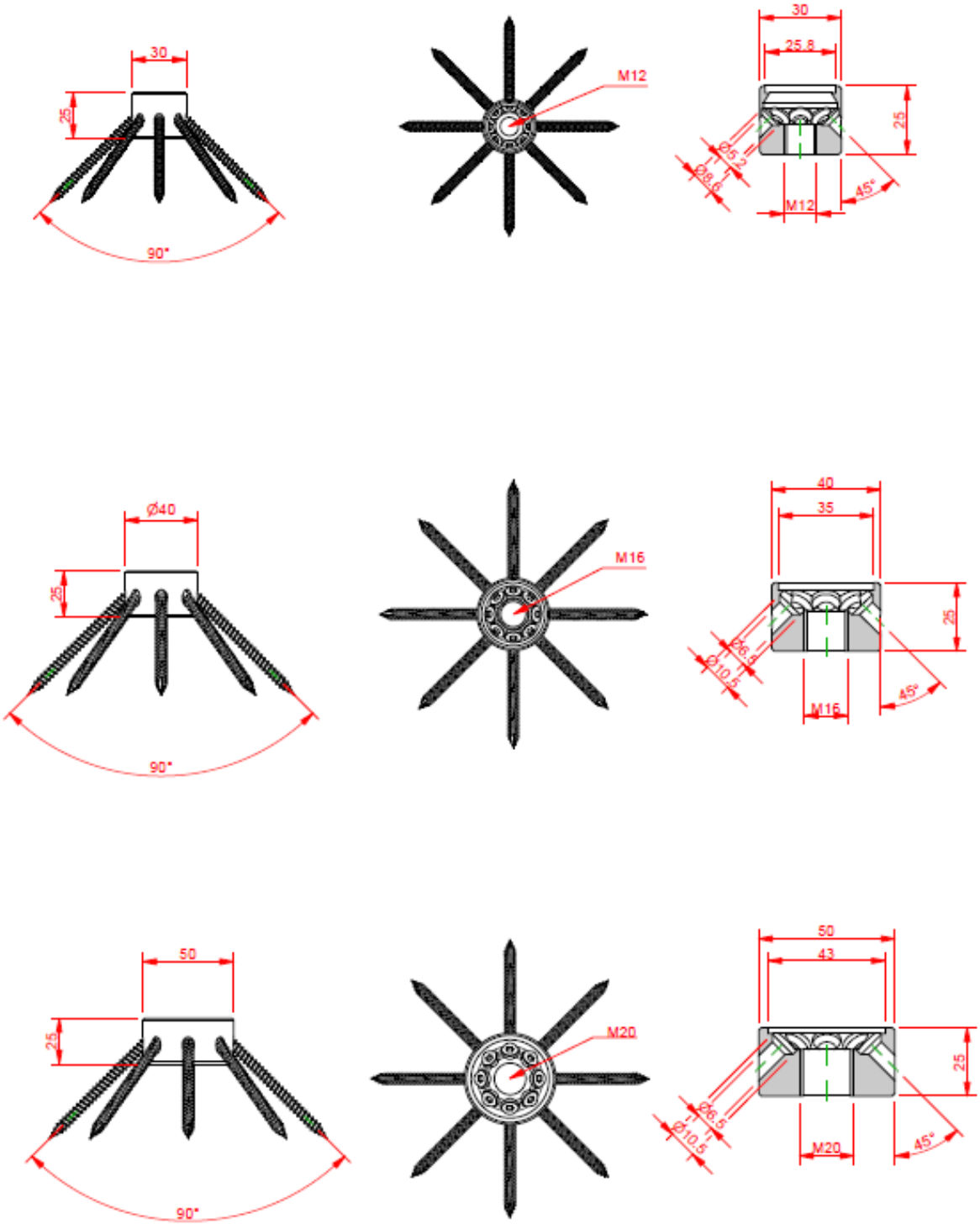

Table D1-1: Size specification

tab.D1-1: range of CCS connectors

Model no.	Dimensions [mm]				
	A	B	C	D	L_x
CCS30	30	25	M12	5	9
CCS40	40	25	M16	6	11
CCS50	50	25	M20	6	13

L_x: Part of the screw that cannot be included in the embedment length

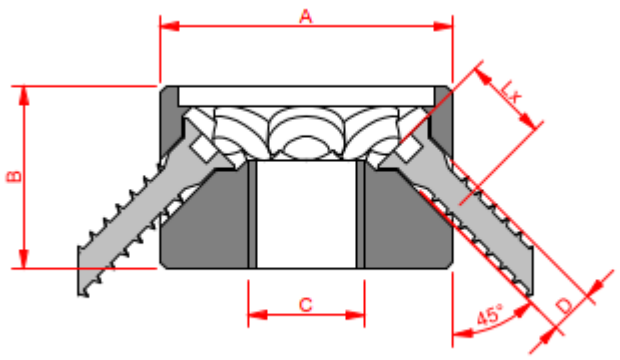

fig.D1-1: generic dimensions of CCS connectors (dark gray), additional screws shown in light gray

Table D1-2: Material specification

Part	Material Grades	Coating specification
CCS	S355 J2 G3	12µm Zinc electroplated

D1-3: Characteristic capacity

Stored Values
For the evaluation of the resistances certain stored values are needed. These stored vales are taking the contributions from screws, bolts and connectors in account.

Screw axial:

$$R_{screw,ax,k} = f_{ax,k} * \mathrm{d} * (\mathrm{L} - \mathrm{L}_x) \leq F_{screw,tens,k}$$

$f_{ax,k}$ withdrawal parameter of the screw for a timber density of 350kg/m³

$F_{screw,tens,k}$ Characteristic tensile capacity of the screw

L_x Length of screw channel inside the CCS, see tab. D1-1

$R_{screw,ax,k}$ Characteristic tensile screw resistance when screwed into a CCS for a timber density of 350kg/m³

L overall screw length

d nominal screw diameter

Screw lateral:

$$R_{screw,lat,k} = 2{,}3\sqrt{\mathrm{M}_{y,Rk} * \mathrm{f}_{h,k} * \mathrm{d}_{ef}}$$

$f_{h,k}$ characteristic embedment strength according to EC5 for a timber density of 350kg/m³

$M_{y,Rk}$ Characteristic yield moment of the screw from DoP

$R_{screw,lat,k}$ Characteristic lateral screw resistance contribution when screwed into a CCS for a timber density of 350kg/m³

d_{ef} nominal screw diameter: $d_{ef} = d_{core} * 1{,}1$ if according to EC5; if screw is covered by an ETA the values shall be taken from this ETA

d_{core} core diameter of the threaded part of the screw

Due to different boundaries there are different numbers of screws active for specific load directions.

tab.D1-3-1: effective numbers n_{ef} for the different screw applications

screw pattern	$n_{1,ef}$	$n_{2,ef}$ for load direction1	$n_{2,ef}$ for load direction2	$n_{3,ef}$
1	0,8	2,4	2,4	7
2	0,25	1	1,4	3
3	0,6	2,4	1,4	6
4	0,25	1	0,8	2

$n_{2,ef}$: For intermediate values between directions 1 and 2 linear interpolation is possible

Bolt lateral (in timber):

$$R_{bolt,lat,k} = f_{h,k} * \mathrm{d} * \left(\sqrt{e^2 + \frac{2*M_{bolt,Rk}}{\mathrm{d}*f_{h,k}}} - e\right)$$

$f_{h,k}$ characteristic embedment strength according to EC5 for a timber density of 350kg/m³

$M_{bolt,Rk}$ characteristic yield moment of the bolt

$R_{bolt,lat,k}$ characteristic lateral bolt resistance contribution when used in timber with a density of 350kg/m³

d relevant bolt diameter (shaft or thread)

e stand-off between CCS and member2

tab.D1-3-2: stand-offs "e" between CCS and member2

CCS size	e [mm]
30	16
40	13
50	11

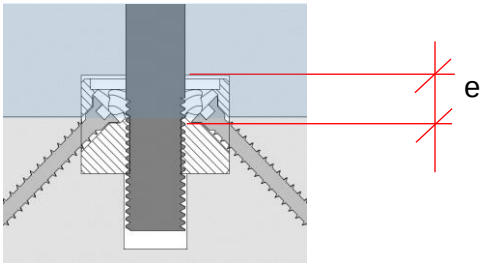

Bolts axial in timber:

The bolts axial resistance is, when placed on timber, limited by the compression resistance of the washer between bolt and timber:

$$R_{c,k,washer} = \mathrm{A}_{ef} * f_{c,90,k} * k_{c,90}$$

$R_{c,k,washer}$ characteristic compression reaction from a washer on a timber with a density of 350kg/m³

A_{ef} net area of the washer in contact with the timber(increase by max 30mm according to EC5 possible)

$f_{c,k,90}$ characteristic compression stress of timber (ρ=350kg/m³) perpendicular to the grain

$k_{c,90}$ increase factor for small area compression perpendicular to grain according to EC5

lateral connector resistance contribution on side grain timber for a timber density of 350kg/m³:

tab.D1-3-3: characteristic embedment resistance $R_{1,lat,side,0°,k}$ [N] of CCS on the side grain, force direction 0°

CCS size	$R_{1,lat,side,0°,k}$
30	4324
40	6608
50	9166

If the force direction is different than 0°, the resulting resistance $R_{1,lat,\alpha,k}$ is given as:

$$R_{1,lat,\alpha,k} = \frac{R_{1,lat,side,0°,k}}{sin^2\alpha + cos^2\alpha}$$

α angle between grain and force direction

lateral connector resistance contribution on end grain timber for a timber density of 350kg/m³:

tab.D1-3-4: characteristic embedment resistance $R_{1,lat,end,k}$ [N] of CCS on the end grain

CCS size	$R_{1,lat,end,k}$
30	2811
40	4295
50	5958

Characteristic lateral resistance of a CCS connection

Both members in a CCS connection have different resistances. Hence the resistance of each member side must be evaluated, the lower of both is controlling.
The CCS capacity on a member is defined by different contributions according to the individual application. The overall capacity are the sum of all contributions. All values needed in the following formulas have been described in the stored values above

<u>Member1 on side grain:</u>

$$R_{lat,k} = R_{1,lat,\alpha,k} + R_{2,lat,k} + R_{3,ax,k}$$

$R_{1,lat,\alpha,k}$ $R_{1,lat,\alpha,k} = \frac{R_{1,lat,side,0°,k}}{sin^2\alpha + cos^2\alpha}$ ($R_{1,lat,side,0°,k}$ is a fixed value from table D1-3-3)

$R_{2,lat,k}$ $R_{2,lat,k} = R_{screw,lat,k} * n_{2ef}$

$R_{3,ax,k}$ $R_{3,ax,k} = R_{screw,ax,k} * n_{3ef}$

<u>Member1 on end grain:</u>

$$R_{lat,k} = R_{1,lat,end,k} + R_{2,lat,k} + R_{3,ax,k}$$

$R_{1,lat,end,k}$ defined above (fixed values in table D1-3-4 above)

$R_{2,lat,k}$ $R_{2,lat,k} = R_{screw,lat,k} * n_{2ef}$

$R_{3,ax,k}$ $R_{3,ax,k} = R_{screw,ax,k} * n_{3ef}$

<u>Member2 on side grain:</u>

$$R_{lat,k} = R_{1,lat,\alpha,k} + R_{bolt,lat,k} + 0{,}25 * R_{c,k,washer}$$

$R_{1,lat,\alpha,k}$ defined above $R_{1,lat,\alpha,k} = \frac{R_{1,lat,side0°,k}}{sin^2\alpha + cos^2\alpha}$

$R_{bolt,lat,k}$ defined above

$0{,}25*R_{c,k,washer}$ rope effect contribution from bolt

Member2 made of steel:

To avoid bolt bending an additional washer must be placed inside the connector to create an EC3 complying bolt application. The proofs for the bolt shall be done according to EC3. The washer creates a different and less beneficial load application for the CCS. Therefore the member1 $R_{lat,k}$-values shall be reduced by a factor of 0,9 when an additional internal washer is used.

Characteristic axial resistance values of CCS connections

Each capacity is defined by

Member1 on side or end grain:

$$R_{ax,k} = n * (R_{screw,ax} + n_{1ef} * R_{screw,lat})$$

n_{1ef} effective number according to table D1-3-1

n total number of screws in specific pattern, see table below

screw pattern	number of screws n
1	8
2	4
3	6
4	4

Member2 on side grain:

$$R_{ax,k} = R_{c,washer,k}$$

Member2 made of steel:

Relevant proof is a tensile bolt, it shall be performed according to EC3. Due to the properties of the CCS no higher bolt grades than 5.6 may be assessed for axial resistance.